King Saud University
College of Engineering
Department of Civil Engineering

GE 201 Statics
Second Semester 1436-37 H
Thursday, 23-5-1437
Time: 90 Min

FIRST MID TERM EXAM

Name (in Arabic): ……....

Student No.: ……..

Section / Instructor: …….....

Q. No.	Max. Marks	Marks Obtained
1	25	
2	20	
Total	45	

Question # 1(a) (5 points)

The resultant R of the forces F_1 and F_2 is 900 N and its line of action has an angle of 30° with x-axis as shown in the figure. Determine the magnitude of F_1 and F_2 forces.

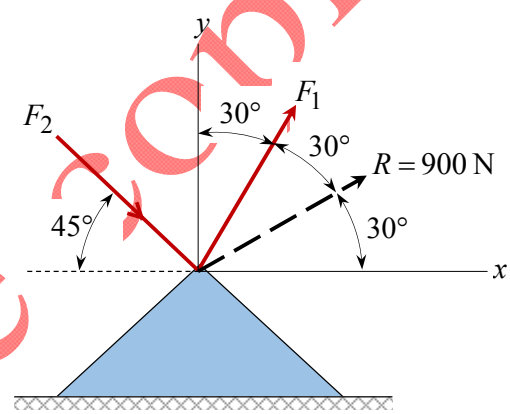

Solution

Applying law of sines:

$$\frac{F_1}{\sin 75^\circ} = \frac{R}{\sin 75^\circ} \Rightarrow F_1 = R = 900 \text{ N} \quad \textit{Ans.}$$

1.5 marks

$$\frac{F_2}{\sin 30^\circ} = \frac{R}{\sin 75^\circ} \Rightarrow F_2 = R \times \frac{\sin 30^\circ}{\sin 75^\circ} = 465.9 \text{ N} \quad \textit{Ans.}$$

1.5 marks

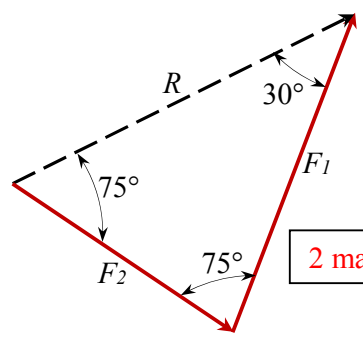

2 marks

Alternative Solution

$$\overset{+}{\rightarrow} R_x = F_1 \cos 60^\circ + F_2 \cos 45^\circ = 900 \times \cos 30^\circ$$

$$\Rightarrow 0.5F_1 + 0.71F_2 = 779.4 \qquad ...(1)$$

1.5 marks

$$\overset{+}{\uparrow} R_y = F_1 \cos 30^\circ - F_2 \cos 45^\circ = 900 \times \sin 30^\circ$$

$$\Rightarrow 0.87F_1 - 0.71F_2 = 450.0 \qquad ...(2)$$

1.5 marks

Solving Eqs. (1) and (2) simultaneously, we have

$F_1 = 900$ N *Ans.*

$F_2 = 465.9$ *Ans.*

2 marks

Student name			page 2/4
Student number			

Question #1(b) (15 points)

For the force system shown in the figure:

a) Replace the given system of forces by a single resultant force *R*,

b) Find the intersections of *R* with *x* and *y* axes measured from point *O*, and

c) Sketch *R* in *x*-*y* plane.

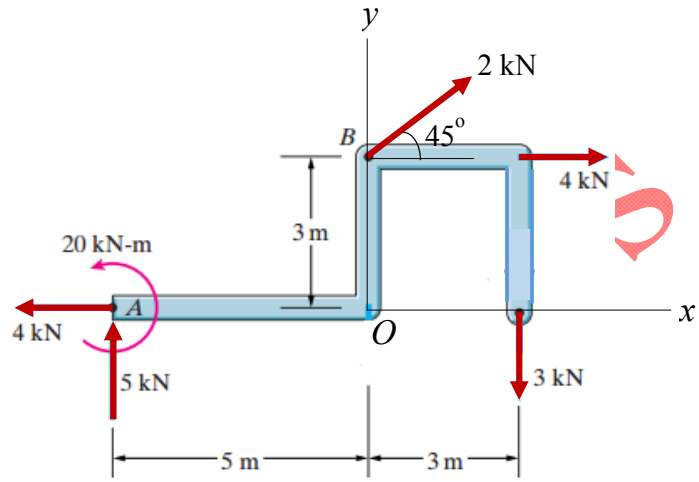

Solution

(a)

$\overset{+}{\rightarrow} R_x = \Sigma F_x = 2\cos 45^\circ + 4 - 4 = 1.414\text{ kN} \rightarrow$ 2 marks

$\overset{+}{\uparrow} R_y = \Sigma F_y = 2\sin 45^\circ + 5 - 3 = 3.414\text{ kN} \uparrow$ 2 marks

$R = \sqrt{R_x^2 + R_y^2} = \sqrt{1.414^2 + 3.414^2} = 3.7\text{ kN}$ *Ans.* 2 marks

Direction of Resultant *R*: $\theta = \tan^{-1}\left(\frac{R_y}{R_x}\right) = \tan^{-1}\left(\frac{3.414}{1.414}\right) = 67.5^\circ$

$CCW(+) M_0 = \Sigma Fd = +20 - 2\cos 45^\circ(3) - 4(3) - 3(3) - 5(5) = -30.24\text{ kN.m (CW)}$ *Ans.* 3 marks

(b) *x* and *y* intercepts

$x = \frac{M_o}{R_y} = \frac{-30.24}{3.414} = -8.86\text{ m}$ *Ans.* 2 marks

$y = -\frac{M_o}{R_x} = -\frac{-30.24}{1.414} = 21.39\text{ m}$ *Ans.* 2 marks

(c) Sketch of Force-couple system at point *O* and then sketch of single *R* (in *x*-*y* plane)

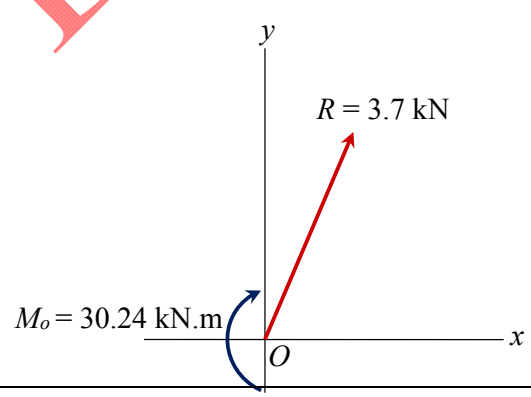

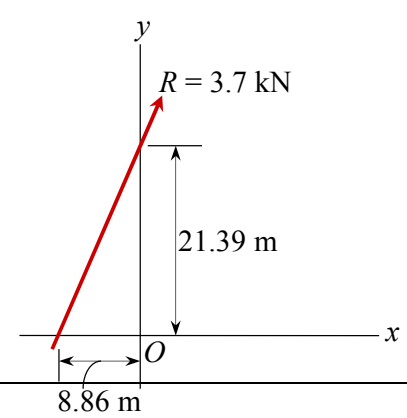

2 marks

Student name		Marks obtained for Q.1	page 2/4
Student number			

Question # 1(c) (5 points)

A rectangular plate with 1 m × 3 m sides is subjected to six forces as shown in the figure. If the moment of these forces about point A is -50 N.m (i.e. Clockwise), calculate the magnitude of the force P.

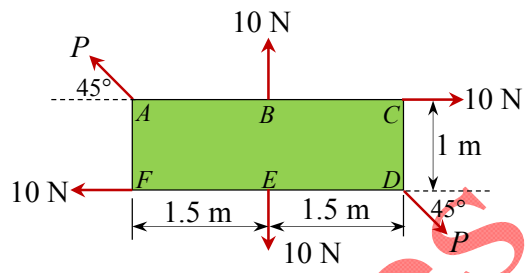

Solution

Given: $M_A = -50$ N.m

The given forces form various couples. The total moment of these couples are

$$P\cos 45^0 \times 1 - P\sin 45^0 \times 3 - 10\times 1 = -50$$
$$\Rightarrow P = 28.3 \text{ N} \quad \textit{Ans.}$$

5 marks

Question # 2 (a) (5 points)

Replace the system of forces and couple shown in the figure by a single force-couple at O.

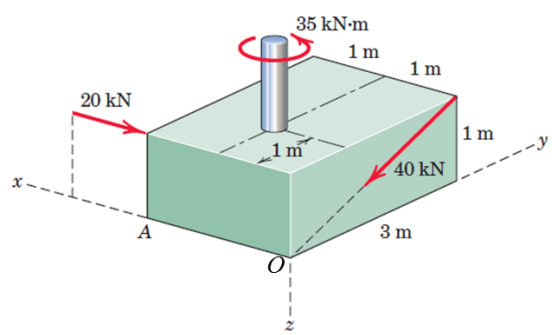

Solution

$$\mathbf{F_1} = -20\mathbf{i} \quad \mathbf{F_2} = 40\times\left[\frac{-3\mathbf{j}+\mathbf{k}}{\sqrt{9+1}}\right] = -37.95\mathbf{j} + 12.65\mathbf{k}$$

2 marks

$$\mathbf{R} = \mathbf{F_1} + \mathbf{F_2} = -20\mathbf{i} - 37.95\mathbf{j} + 12.65\mathbf{k} \quad \textit{Ans.}$$

1 mark

$$\mathbf{M}_O = \mathbf{r}\times\mathbf{F}_1 - 35\mathbf{k} = (-\mathbf{k})\times(-20\mathbf{i}) - 35\mathbf{k} = 20\mathbf{j} - 35\mathbf{k} \text{ kN.m} \quad \textit{Ans.}$$

2 marks

Student name		**Marks obtained for Q.2**	page 3/4
Student number			

Question # 2(b) (15 points)

For the given force of 2 kN, determine in a vector form

(i) Moment about the point O ($\mathbf{M}_O$)

(ii) Moment about the point A ($\mathbf{M}_A$)

(iii) Moment about the line OD ($\mathbf{M}_{OD}$)

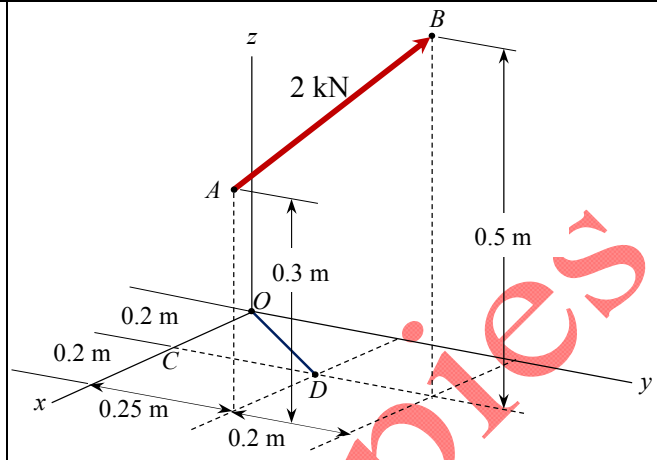

Solution

Coordinates: $O(0, 0, 0)$; $A(0.4, 0.25, 0.3)$; $B(0.2, 0.45, 0.5)$; $C(0.2, 0, 0)$; $D(0.2, 0.25, 0)$

(i) *Moment about the point O*

$$\mathbf{F} = 2\mathbf{n}_{AB} = 2\times\left[\frac{(0.2-0.4)\mathbf{i}+(0.45-0.25)\mathbf{j}+(0.5-0.3)\mathbf{k}}{\sqrt{(0.2-0.4)^2+(0.45-0.25)^2+(0.5-0.3)^2}}\right] = -1.16\mathbf{i}+1.16\mathbf{j}+1.16\mathbf{k} \text{ kN}$$

4 marks

$\mathbf{r}_{OA} = 0.4\mathbf{i}+0.25\mathbf{j}+0.3\mathbf{k}$ m ;

1 mark

$$\mathbf{M}_O = \mathbf{r}_{OA}\times\mathbf{F} = \begin{vmatrix} \mathbf{i} & \mathbf{j} & \mathbf{k} \\ 0.4 & 0.25 & 0.3 \\ -1.16 & 1.16 & 1.16 \end{vmatrix} = -0.058\mathbf{i}-0.812\mathbf{j}+0.754\mathbf{k} \text{ kN.m} \quad \textit{Ans.}$$

3 marks

(ii) *Moment about the point A*

$\mathbf{M}_A = 0$ (Line of action of the given force is passing through point A)

1 mark

(iii) *Moment about the line OD*

$$\mathbf{n}_{OD} = \left[\frac{(0.2-0)\mathbf{i}+(0.25-0)\mathbf{j}+(0-0)\mathbf{k}}{\sqrt{(0.2-0)^2+(0.25-0)^2+(0-0)^2}}\right] = 0.625\mathbf{i}+0.781\mathbf{j}+0\mathbf{k}$$

2 marks

In scalar form:

$$M_{OD} = \mathbf{M}_O.\mathbf{n}_{OD} = (-0.058\mathbf{i}-0.812\mathbf{j}+0.754\mathbf{k}).(0.625\mathbf{i}+0.781\mathbf{j}) = -0.67 \text{ kN.m}$$

2 marks

In vector form:

$$\mathbf{M}_{OD} = (\mathbf{M}_O.\mathbf{n}_{OD}).\mathbf{n}_{OD} = -0.67(0.625\mathbf{i}+0.781\mathbf{j}) = -0.42\mathbf{i}-0.52\mathbf{j} \text{ kN.m} \quad \textit{Ans.}$$

2 marks