Manufacturing Processes (2), IE-352

Ahmed M El-Sherbeeny, PhD

Spring 2016

Manufacturing Engineering Technology in SI Units, 6th Edition

Chapter 23:
Machining Processes: Hole Making – Part B (Drilling)

Drilling, Drills, and Drilling Machines

- Most products have many holes in them
  - e.g. for rivets on plane wings
  - e.g. for bolts in engine blocks
- Holes used for:
  - assembly with fasteners (e.g. screws, bolts, rivets)
  - design purposes (e.g. weight reduction, ventilation)
  - appearance
- **Hole making**:
  - Among most important operations in manufacturing
  - **Drilling** is major, common hole-making process
  - Cost is among highest machining costs in car engine prod^{on}

Drilling, Drills, and Drilling Machines: Drills

- Drill properties:
  - Have high length-to-diameter ratios (see next slide)
  - Thus, capable of producing deep holes
  - Caution: drills are flexible ⇒ should be used with care
    - to drill holes accurately
    - and to prevent breakage

- Drilling Marks:
  - Drills leave *burr** on bottom surface upon breakthrough
    - ⇒ requires deburring operations
  - Rotary motion of drilling
    - ⇒ holes with “circumferential marks” on walls

Drilling, Drills, and Drilling Machines: Drills

2 common types of drills

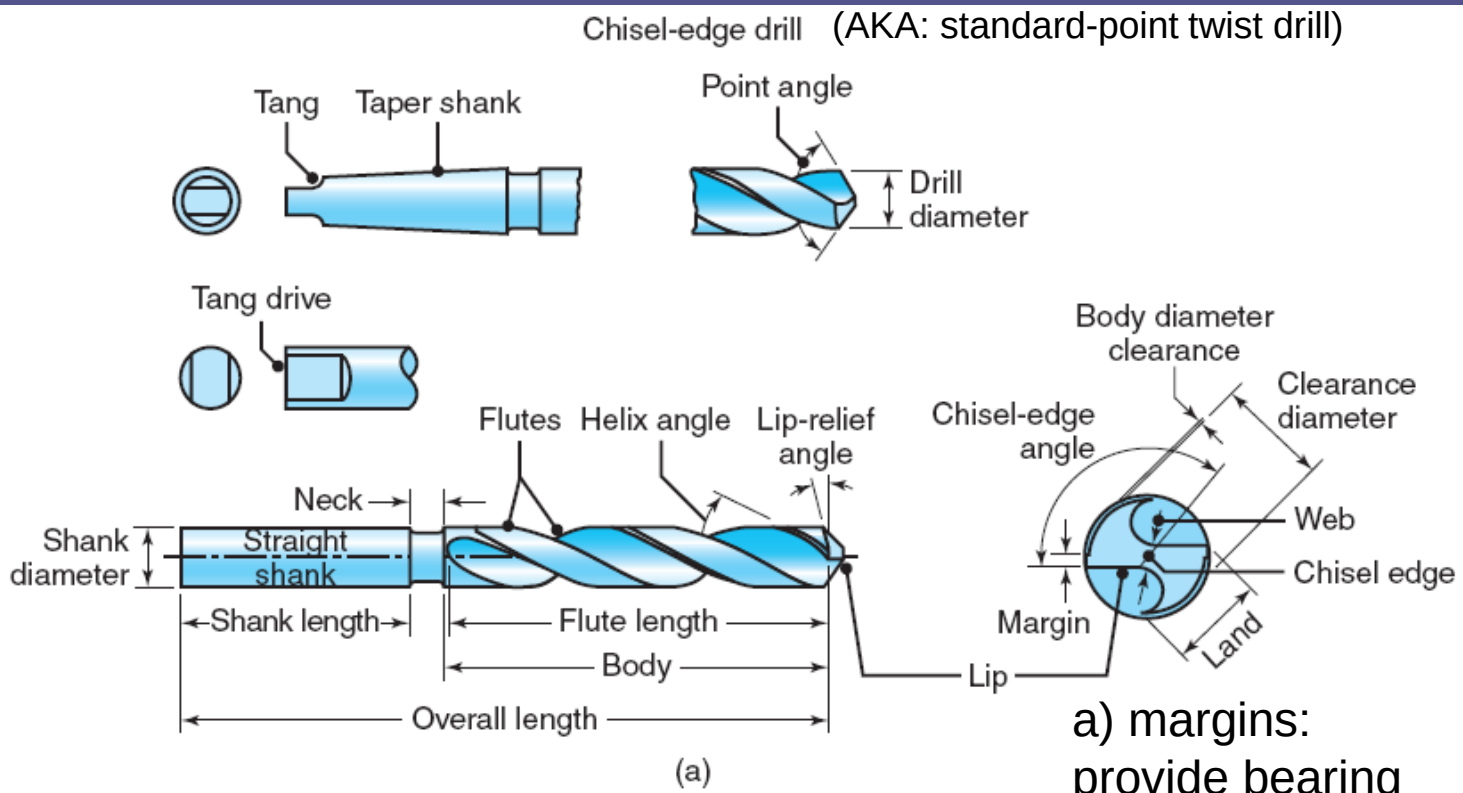

a) margins: provide bearing surface for drill against walls of hole as it penetrates workpiece

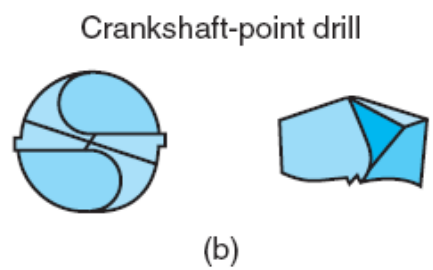

b) have good centering ability, chips break easily ⇒ suitable for deep holes

Drilling, Drills, and Drilling Machines: Drills

Drill oversize:

- Oversize: fact that ø of hole > drill ø (slightly)
- This is visible: easy to remove drill after making hole
- Oversize depends on:
  - Quality of drill
  - Equipment
  - Expansion of metallic/non-metallic material due to drilling heat
- In the end: possible that final hole ø < drill ø
- To improve S.F. and dim. acc.:
  - Perform reaming/honing* on drilled holes
- Capabilities of drilling/boring: shown on next slide

Drilling, Drills, and Drilling Machines: Drills

General Capabilities of Drilling and Boring Operations

		Hole depth/diameter	
Cutting tool	Diameter range (mm)	Typical	Maximum
Twist drill	0.5–150	8	50
Spade drill	25–150	30	100
Gun drill	2–50	100	300
Trepanning tool	40–250	10	100
Boring tool	3–1200	5	8

- Note, depth/diameter is a ratio (i.e. unitless)
  - e.g. for twist drill:
  - typical depth @ $100\ mm\ \emptyset\ =\ 8\ *\ 100\ mm\ =\ 800\ mm$

Drilling, Drills, and Drilling Machines: Drills

Twist Drill

- Most common drill: conventional standard-point twist drill
- Geometry of drill point:
  - normal rake angle and V of cutting edge vary with distance from center of drill
- Main features of twist drill (typical angles):

1. *Point angle* $(118° \; to \; 135°)$
2. *Lip-relief angle* $(7° \; to \; 15°)$
3. *Chisel-edge angle* $(125° \; to \; 135°)$
4. *Helix angle* $(15° \; to \; 30°)$

Drilling, Drills, and Drilling Machines: Drills

Cont. Twist Drill

- Grooves in drills:
  - Spiral grooves run along length of drill
  - Chips: guided through grooves, upward
  - Grooves: also allow cutting fluid to reach cutting edges
  - Some drills have internal longitudinal holes for cutting fluids (a) $\Rightarrow$ lubrication, cooling, flushing chips
  - Drills have **chip-breaker** feature ground along cutting edges
- Drill angles (chosen carefully):
  - Produce accurate holes
  - Minimize drilling forces and torque
  - Increase drill life
  - Small change in angles $\Rightarrow$ great change in performance*

Drilling, Drills, and Drilling Machines: Drills

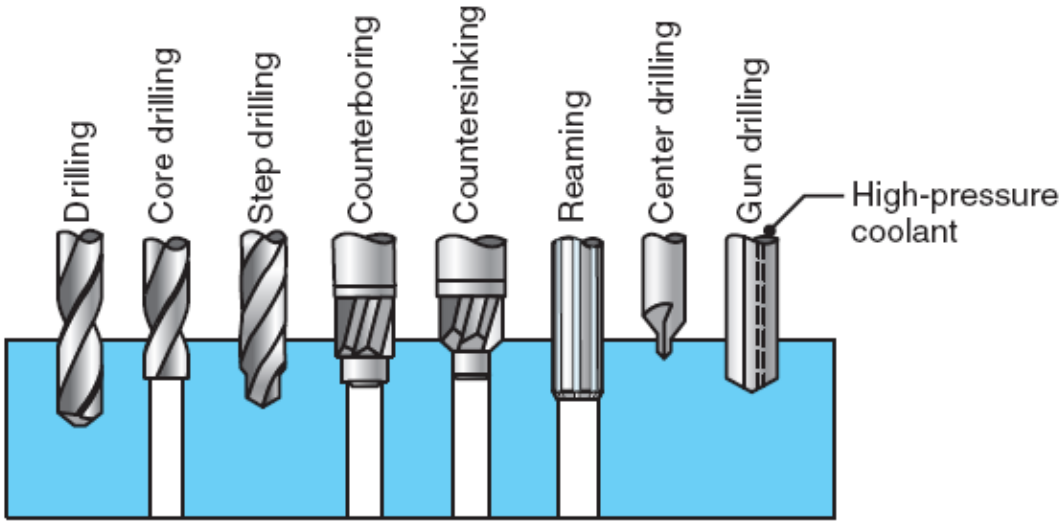

Other Types of Drills

- *Step drill:*
  - Holes with ≥ 2 ø's
- *Core drill*:
  - Enlarge existing hole
- *Counter boring/countersinking:*
  - Make depressions on surfaces to accommodate heads of screws, bolts below workpiece surface
- Center drill:
  - Short; produce hole at end of piece of stock
- Spot drill:
  - Spots (i.e. starts) hole at desired location on a surface

Drilling, Drills, and Drilling Machines: Drills

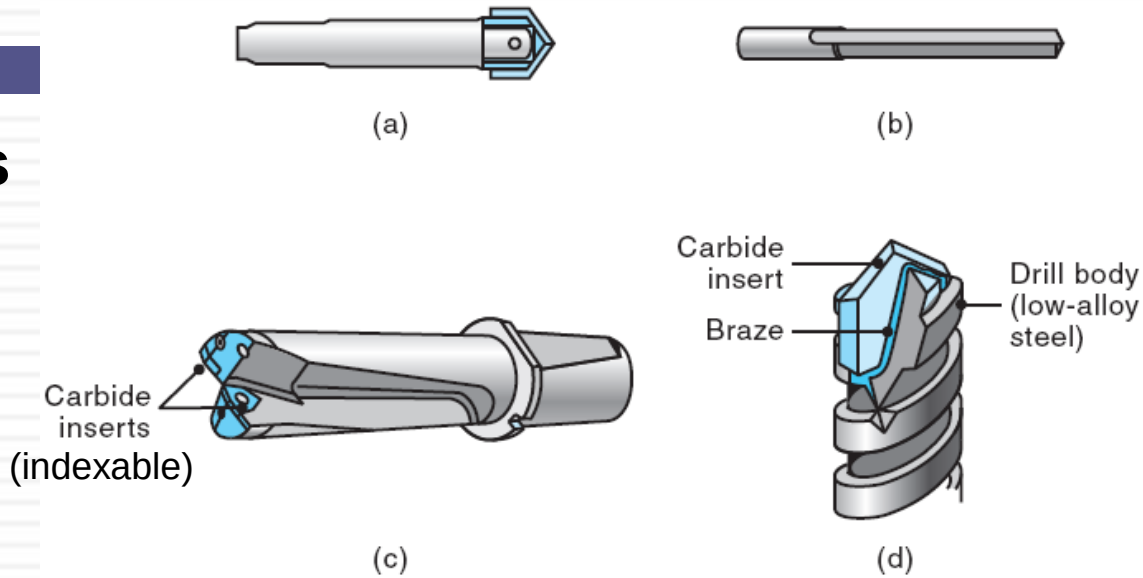

Other Types of Drills

- *Spade drills* (a):
  - Removable bits
  - Large ∅ holes
  - Deep holes
  - Advantages: high stiffness, ease of grinding edges, low cost
- *Straight-flute drill* (b)*:*
  - Similar to spade drill
- Solid carbide (c), carbide-tipped drills* (d) for drilling:
  - Hard materials (e.g. cast irons)
  - High-temp. metals
  - Abrasive (e.g. concrete) and composite materials (e.g. glass)

Drilling, Drills, and Drilling Machines: Drills

Gun Drilling

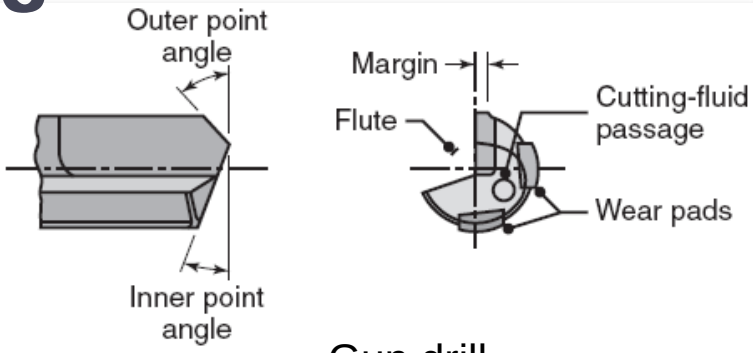

(a) Gun drill

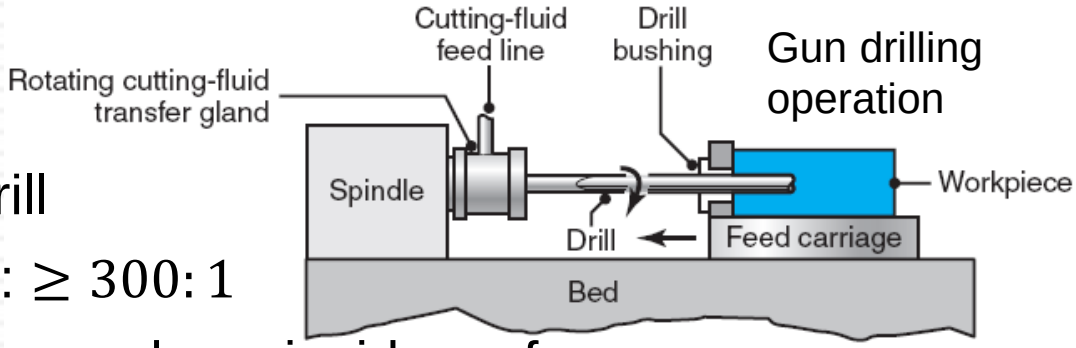

Gun drilling operation

(b)

- Name origin "gun"
  - Drilling gun barrels
- Features:
  - Drilling deep holes
  - Requires a special drill
  - Hole depth-to-Ø ratio: $\geq 300:1$
  - F_t balanced by bearing pads on inside surface
  - $\Rightarrow$ gun drill: self-centering (important for drilling deep holes)
- Gun trepanning:
  - Uses cutting tool similar to gun drill
  - Tool has a central hole

Drilling, Drills, and Drilling Machines: Drills

Cont. Gun Drilling

- Cutting fluid
  - Forced under high pressure through passage in drill body (fig a)
  - Cooling and lubrication effect
  - Also: flushes out chips that could be trapped in deep holes
  - $\Rightarrow$ chips don't interfere with drilling operation
  - $\Rightarrow$ no need to retract tool to clear chips (i.e. unlike twist drills)

Drilling, Drills, and Drilling Machines: Drills

Trepanning

- Name origin:
  - "Trypanon" (Greek) i.e. boring a hole
- Cutting tool produces a hole:
  - By removing a disk-shaped piece (*core*) from flat plates
  - Without changing all material to chips (i.e. unlike drilling)
- Can make disks:
  - Up to $250\ mm$ in diameter
  - From flat sheets, plates, structural members (e.g. I-beams)
- Carried out:
  - On lathes, drill presses, or other machine tools
  - Using single-point or multipoint tools (fig. b)

Drilling, Drills, and Drilling Machines: Drills

Cont. Trepanning

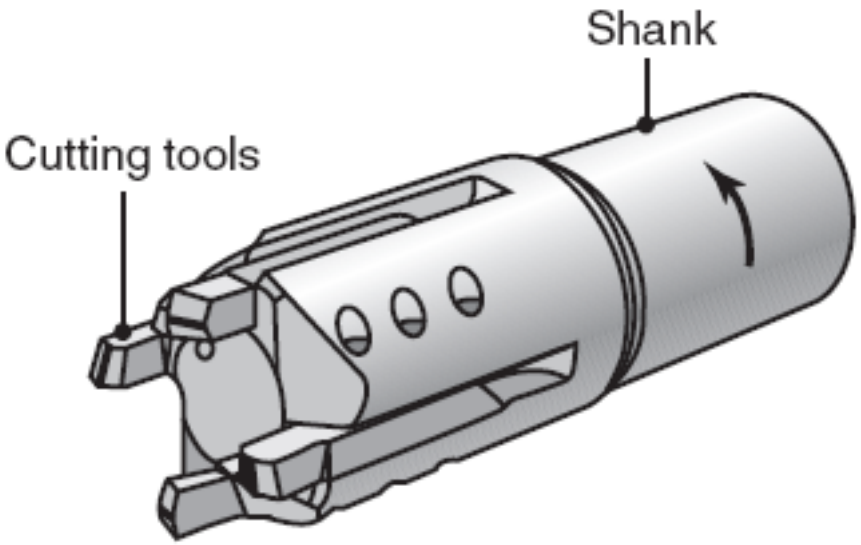

a) Trepanning tool

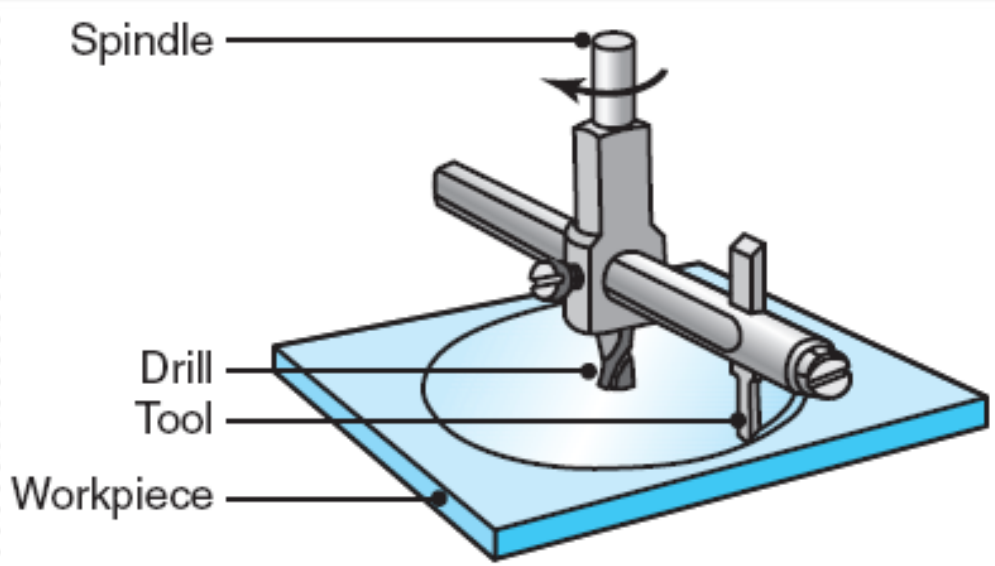

b) Trepanning with drill-mounted single cutter

Drilling, Drills, and Drilling Machines: Material-removal Rate in Drilling

- Material-removal rate (MRR) in drilling:
  - Volume of material removed per unit time*
- Drill diameter: D
- C.S.A. of drilled hole: $\pi D^2/4\ [mm^2]$
- Velocity of drill ($\perp$ to workpiece):
  - $V = fN$
  - f, feed: dist. drill penetrates/unit rev., i.e. $f = \pi D\ [mm/rev]$
  - N: rotational speed $[rev/\mathrm{min}]$
- $\Rightarrow MRR\ = C.S.A\ * V = \left(\frac{\pi D^2}{4}\right) \cdot\ fN$
  - Check dimensions: $MRR = (mm^2)(mm/\cancel{rev})(\cancel{rev}/min)$ $= mm^3/min$ (which are units of volume / unit time)

Drilling, Drills, and Drilling Machines: Thrust Force and Torque

- Thrust force (F_t)
  - Acts perpendicular to hole axis (i.e. radially or sideways)
  - Excessive $F_t \Rightarrow$
    - Drill: bends or breaks
    - Workpiece: distorted (esp. if it does not have sufficient stiffness*)
    - or Workpiece: slips into workholding fixture
- F_t depends on:
  1. Strength of the workpiece material
  2. Feed
  3. Rotational speed
  4. Drill diameter
  5. Drill geometry
  6. Cutting fluid

Drilling, Drills, and Drilling Machines: Thrust Force and Torque

- Finding F_t:
  - Accurate calculation is difficult
  - Range:
    - few N for small drills
    - to $100\ kN$ for high-strength materials with large drills
  - Experimental data: helps in using drills

Drilling, Drills, and Drilling Machines: Thrust Force and Torque

Torque

- Knowledge of torque (T) in drilling:
  - Essential for estimating the power requirement
  - But difficult to calculate (due to many factors involved)
- $T\ [N \cdot m]$ can be estimated from data tables:
  - e.g. table showing sp. power for different materials (*Table 21.2*)
  - Note, *power dissipated in drilling = torque * rotational speed*
  - i.e. $\boldsymbol{Power} = \boldsymbol{T} * \boldsymbol{N}\ [(N.m)(rev/min)]$
  - Remember, $sp.power$: $\boldsymbol{u_t} = \frac{\boldsymbol{Power}}{\boldsymbol{MRR}}\ [W \cdot s/mm^3]$
  - $\Rightarrow \boldsymbol{T} = \frac{\boldsymbol{Power}}{\boldsymbol{N}} = \frac{\boldsymbol{u_t} \cdot \boldsymbol{MRR}}{\boldsymbol{N}}\ [(N.m/s)/(rev/min)]$
  - Note, for proper units: N must be expressed as:
    - N: rotational speed from $[rev/\mathrm{min}]$ to $[2\pi\ rad./60s]$ **

Drilling, Drills, and Drilling Machines: Thrust Force and Torque

EXAMPLE 23.4

Material-removal Rate and Torque in Drilling

A hole is being drilled in a block of magnesium alloy with a $10 - mm$ drill bit at a feed of $0.2\ mm/rev$ and with the spindle running at $N = 800\ rpm$. Calculate the material-removal rate and the torque on the drill.

Drilling, Drills, and Drilling Machines: Thrust Force and Torque

Solution

Material-removal Rate and Torque in Drilling

The material-removal rate is

$$MMR = \left(\frac{\pi(10)^2}{4}\right)(0.2)(800) = 12{,}570\ \text{mm}^3/\text{min} = 210\ \text{mm}^3/\text{s}$$

The power required is $Power = (210)(0.5) = 105\ \text{W}$

The torque is $T = \dfrac{105}{83.8} = 1.25\ \text{Nm}$

Copyright © 2010 Pearson Education South Asia Pte Ltd

Drilling, Drills, and Drilling Machines: Drill Materials and Sizes

- Drill materials:
  - Usually made from HSS
  - Also solid carbides or with carbide tips
- Drills commonly coated with:
  - TiN or $TiCN$* for increased wear resistance
- Polycrystalline-diamond-coated drills:
  - Used to make fastener holes
  - Used with fiber-reinforced plastics
  - Have high wear resistance
  - 1000’s of holes can be drilled with little damage to drill material

Drilling, Drills, and Drilling Machines: Drill Materials and Sizes

- Standard twist-drill sizes consist of following series:

1. **Numerical**
   - No. 97 ($0.0059\ in. - 0.15\ mm$) to No. 1 ($0.228\ in. - 5.79\ mm$)
2. **Letter**
   - A ($0.234\ in. - 5.94\ mm$) to Z ($0.413\ in. - 10.49\ mm$)
3. **Fractional**
   - Straight shank: from $\frac{1}{64} - 1\frac{1}{4}\ in.$ (in $\frac{1}{64} - in.$ increments) to $1\frac{1}{2}\ in.$ (in $\frac{1}{32} - in.$ increments)*
   - Taper shank: $\frac{1}{8} - 1\frac{3}{4}\ in.$ (in $\frac{1}{64} in.\ \Delta's$) to $3.5\ in.$ (in $\frac{1}{16} in.\ \Delta's$)
4. **Millimeter**
   - From $0.05\ mm$ ($0.002\ in.$) in $0.01\ mm\ \Delta's$

Drilling, Drills, and Drilling Machines: Drilling Practice

- Drill chucks:
  - Used to hold drills (and similar hole-making tools)
  - Tightened with/without keys
  - Special chucks
    - Have quick change features
    - Do not require stopping the spindle
    - Available for use in production machinery
- Lateral deflection of drill:
  - Drills do not have a centering action
  - $\Rightarrow$ tend to “walk” on workpiece surface at start of operation
  - Problem severe with small-D long drills, may lead to failure

Drilling, Drills, and Drilling Machines: Drilling Practice

- Avoiding lateral deflection of drill (at start of drill):
  1. Guide drill using fixtures
  2. Use center drill to make small starting hole before drilling
     - Usually @ $60°$ point angle
  3. Grind drill point to an *S* shape (important with CNC machines)
     - This has a self-centering characteristic
     - $\Rightarrow$ no need for center-drilling
     - Produces accurate holes with improved drill life
  4. Use centering punch $\Rightarrow$ produces initial impression
  5. Add dimples (or other features) in cast or forged blank

Copyright © 2010 Pearson Education South Asia Pte Ltd

Drilling, Drills, and Drilling Machines: Drilling Practice

Drilling Recommendations

- Speed:
  - Recommended ranges for V and f shown in table (next slide)
  - Speed here is *surface speed*, V, of drill at its periphery
  - Example:
    $12.7\ mm$ drill, rotating at $300\ rpm$*, has a surface speed of:

$$V = radius * N$$

$$= \left(\frac{12.7}{2}\ mm\right)(300\ rev/min)(2\pi\ rad/rev)(\frac{1}{1000}\ m/mm)$$

$$= 12\ m/min$$

  - Note how surface speed (RN) is different than drill velocity (fN)
  - Drilling holes $<\ 1\ mm$ (in diameter):
    - N can be up to $30{,}000\ rpm$ (depending on workpiece material)

Drilling, Drills, and Drilling Machines: Drilling Practice

Drilling Recommendations

General Recommendations for Speeds and Feeds in Drilling

		Drill diameter			
		Feed, mm/rev		Speed, rpm	
Workpiece material	Surface speed m/min	1.5 mm	12.5 mm	1.5 mm	12.5 mm
Aluminum alloys	30–120	0.025	0.30	6400–25,000	800–3000
Magnesium alloys	45–120	0.025	0.30	9600–25,000	1100–3000
Copper alloys	15–60	0.025	0.25	3200–12,000	400–1500
Steels	20–30	0.025	0.30	4300–6400	500–800
Stainless steels	10–20	0.025	0.18	2100–4300	250–500
Titanium alloys	6–20	0.010	0.15	1300–4300	150–500
Cast irons	20–60	0.025	0.30	4300–12,000	500–1500
Thermoplastics	30–60	0.025	0.13	6400–12,000	800–1500
Thermosets	20–60	0.025	0.10	4300–12,000	500–1500

Note: As hole depth increases, speeds and feeds should be reduced. The selection of speeds and feeds also depends on the specific surface finish required.

Drilling, Drills, and Drilling Machines: Drilling Practice

Drilling Recommendations

- Feed:
  - Feed in drilling: dist. drill travels into workpiece per revolution
  - Recommendation: for most workpiece materials:
    drills with $D = 1.5\ mm$ should have $f = 0.025\ mm/rev$
  - Example:
    A $1.5\ mm - D$ drill rotating at $2000\ rpm$, has linear speed of:

$$V = f * N$$
$$= (0.025\ mm/rev)(2000\ rev/min)$$
$$= 50\ mm/min$$

Drilling, Drills, and Drilling Machines: Drilling Practice

Drilling Recommendations

- Chip removal during drilling:
  - Can be difficult
  - Especially: deep holes in soft and ductile workpiece materials
  - To avoid this:
    - Retract drill periodically ("pecking"), then:
    - Removing chips accumulated along drill flutes
    - Otherwise: drill may break due to high T, or "walk-off" location and produce mis-shaped hole
  - Table: shows guide to general problems in drilling operations

Drilling, Drills, and Drilling Machines: Drilling Practice

Drilling Recommendations

General Troubleshooting Guide for Drilling Operations

Problem	Probable causes
Drill breakage	Dull drill, drill seizing in hole because of chips clogging flutes, feed too high, lip relief angle too small
Excessive drill wear	Cutting speed too high, ineffective cutting fluid, rake angle too high, drill burned and strength lost when drill was sharpened
Tapered hole	Drill misaligned or bent, lips not equal, web not central
Oversize hole	Same as previous entry, machine spindle loose, chisel edge not central, side force on workpiece
Poor hole surface finish	Dull drill, ineffective cutting fluid, welding of workpiece material on drill margin, improperly ground drill, improper alignment

Drilling, Drills, and Drilling Machines: Drilling Practice

Drill Reconditioning

- Drills reconditioned by grinding, either:
  - Manually (i.e. by hand), or
  - With special fixtures
- Reconditioning: especially important with CNC machines
- Hand grinding:
  - Difficult
  - Requires considerable skill to produce symmetric cutting edges
- Grinding on fixtures:
  - Accurate
  - Done on special computer controlled grinders
- Coated drills can be recoated

Drilling, Drills, and Drilling Machines: Drilling Practice

Measuring Drill Life

- Drill life measured by no. of holes drilled:
  - Before they become dull, and
  - Need to be re-worked or replaced
- Determining drill life experimentally:
  - Clamping material on dynamometer/force transducer
  - Drilling number of holes
  - Recording T or F_t during each operation
  - After certain no. of holes: T & F_t ↑ since tool becomes dull
  - Drill life here is: no. of holes drilled until this transition begins
- Other techniques to measure drill life:
  - Monitoring vibrations and acoustic emissions (*Ch. 21: tool life*)

Drilling, Drills, and Drilling Machines: Drilling Machines

- Drilling machines
  - Used for drilling holes, tapping, reaming and small-diameter boring operations
  - Most common machine: drill press (fig. a)
- Drilling process:
  - Workpiece is placed on adjustable table by:
    - Clamping directly into slots and holes in the table, or using:
    - Vise* (→: swivel vise), which's then clamped to table
  - Drill is lowered:
    - Manually (requires skill in judging appropriate f), or:
    - Using handwheel, or:
    - By power feed at preset rates

Drilling, Drills, and Drilling Machines: Drilling Machines

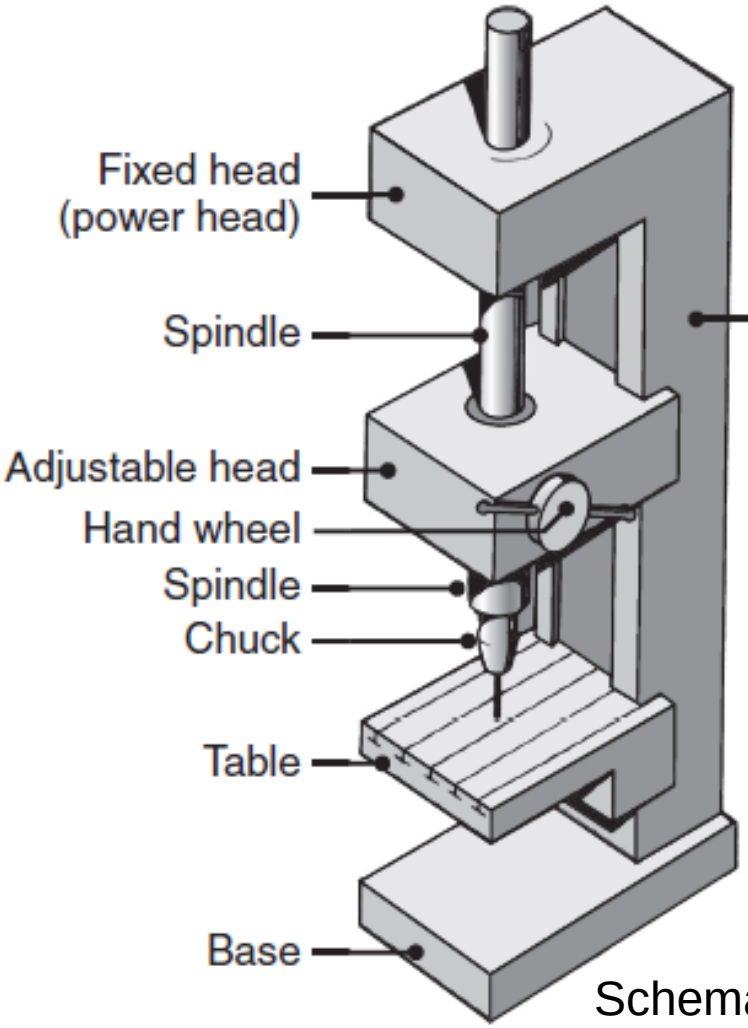

(a) Schematic: components of **vertical** drill

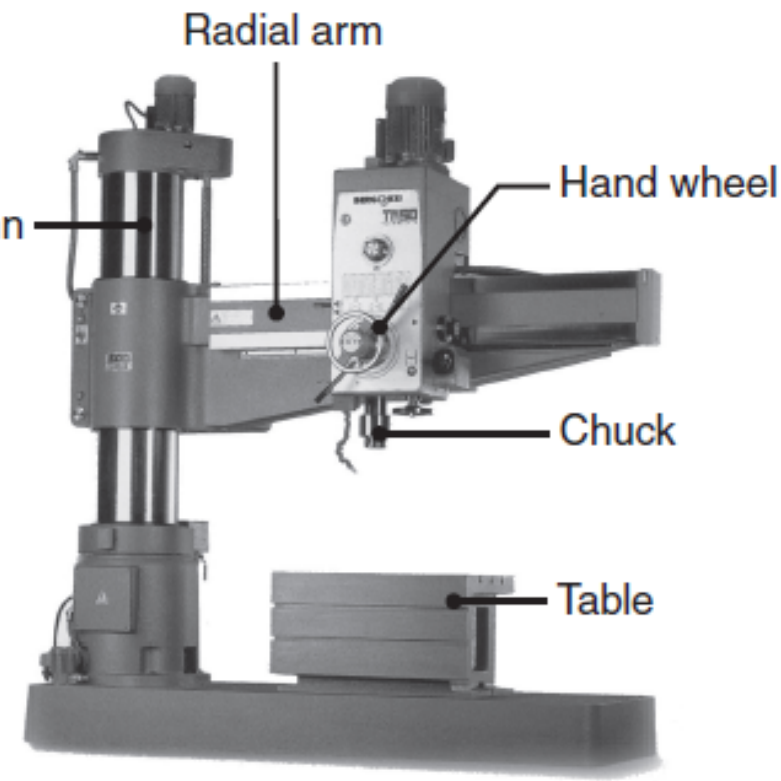

(b) **Radial** drilling machine

Drilling, Drills, and Drilling Machines: Drilling Machines

- Drill presses:
  - Designated by largest workpiece D accommodated on table
  - Typical range $D = 150\ to\ 1250\ mm$
- Adjusting spindle speed
  - Necessary to maintain proper cutting speed at drill cutting edge
  - Allows using different drill sizes
- Types of drilling machines (traditional machines)
  1. Simple: **bench type drills**, used to drill small-D holes
  2. Large: **radial drills** (fig. b), used for large workpieces
  3. **Universal drilling machines**: drill head can be swiveled to drill holes at an angle

Drilling, Drills, and Drilling Machines: Drilling Machines

- Cont. Types of drilling machines (developments):
  4. **Numerically controlled three-axis drilling machines** (fig.):
     - Operations performed automatically & in desired sequence using turret
     - Turret holds different tooling tools
  5. **Gang drilling:**
     - Drilling machines with multiple spindles*
     - Used for high-production-rate operations
     - Capable of drilling 50 holes in 1 cycle (different sizes, depths, locations)
     - Also used for reaming, counterboring operations
  6. **Numerical-control turret drilling machines**
     - Replacing machine tools and gang-drilling machines
  7. **Special drilling machines**
     - e.g. produce holes in continuous hinges (e.g. piano hinges)
     - Horizontal and produce holes up to $3 - m$ long segments per cycle

Drilling, Drills, and Drilling Machines: Drilling Machines

3-axis NC drilling machine; turret holds as many as 8 different tools (e.g. drills, taps, reamers)

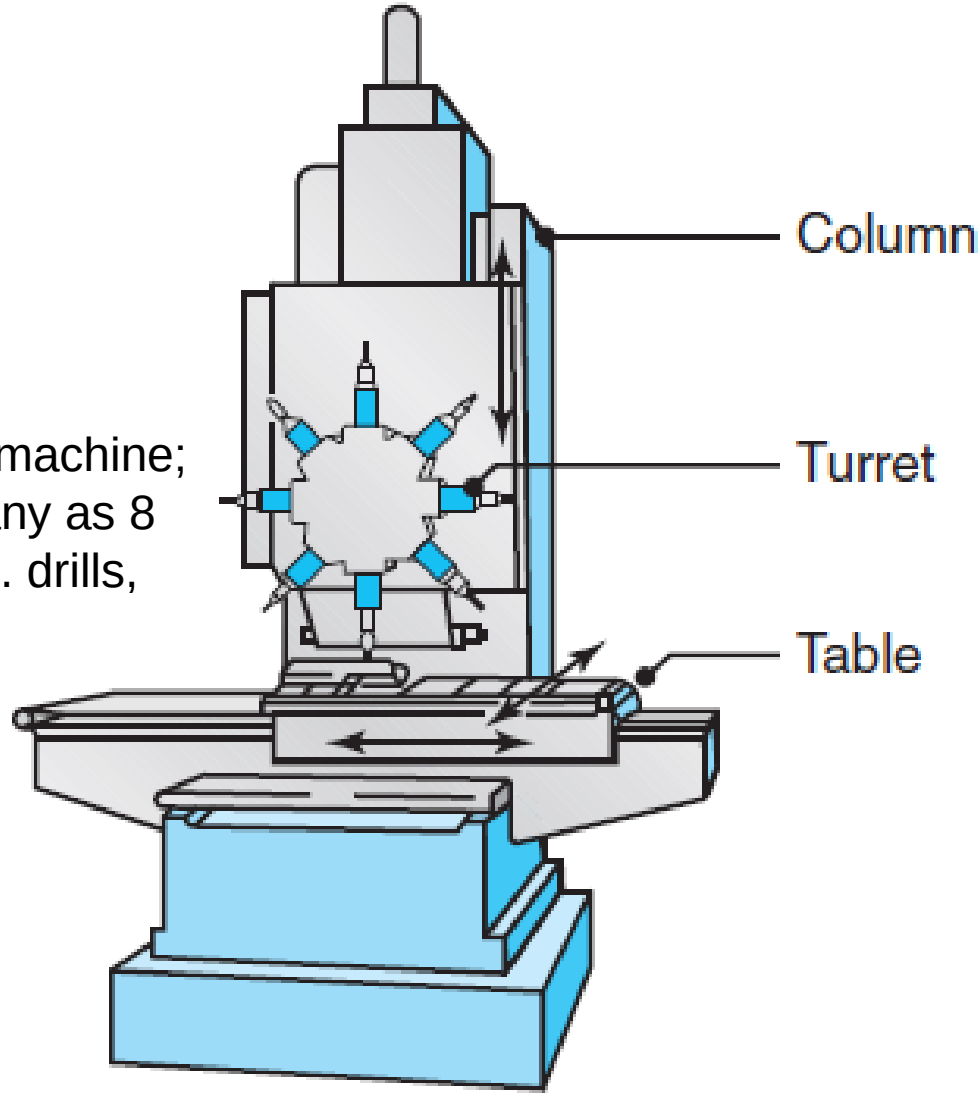

Drilling, Drills, and Drilling Machines: Drilling Machines

- Workholding devices:
  - Ensure workpiece is located properly
  - Keep workpiece from slipping or rotating during drilling
  - Available in various designs
  - Important features:
    - 3-point locating (for accuracy)
    - 3-D workholding for secure fixtures

Drilling, Drills, and Drilling Machines: Design Considerations for Drilling

- Basic design guidelines for drilling:
  1. Designs should allow holes to be drilled
     - On flat surfaces and ⊥ to drill motion
     - Otherwise: drills deflect and hole will not be located properly
  2. Interrupted hole surfaces should be avoided
     - This ensures: dim. acc., longer drill life, avoids vibrations
  3. Hole bottoms should match standard drill-point angles
  4. Through holes are preferred over blind holes
  5. Dimples should be provided:
     - When pre-existing holes not possible, to reduce drill “walk-off”
  6. Parts should be designed to drill with minimum of fixturing
  7. Blind holes: drill deeper than subsequent reaming/tapping