Q (1) In this circuit, find the followings:
(a) the total apparent power (S_T).
(b) the circuit power factor.
(c) the circuit total current (**I**)

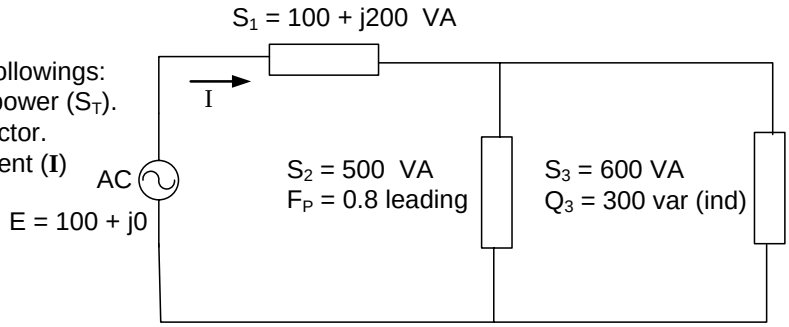

Q (2) Using superposition theorem, calculate the current (**I**) shown in the circuit.

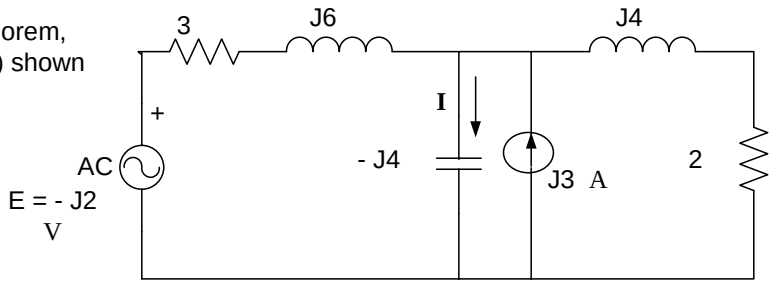

Q (3) In the circuit shown, find the Thevenin and Norton equivalent circuit across the load impedance Z_L. Show that both circuits produce the same current (I_L) in a load Z_L of (3+ J7) .

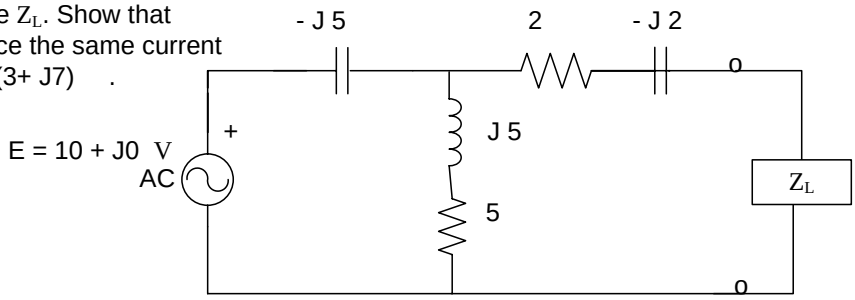

Ω

Q (4) Using mesh analysis, find out the power of the voltage source in this circuit. Also, calculate the power dissipated in each resistor in the circuit.

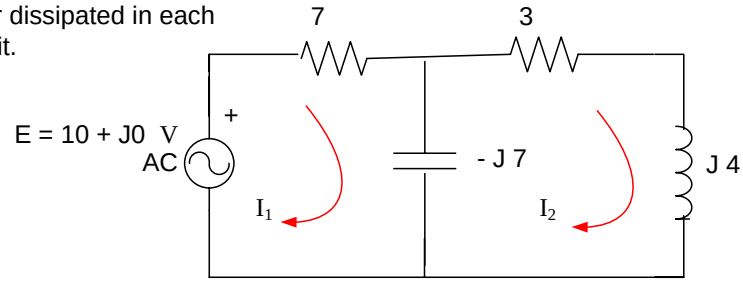

Q (5) Using Nodal analysis, Find out V_1 and V_2 indicated in the shown circuit.

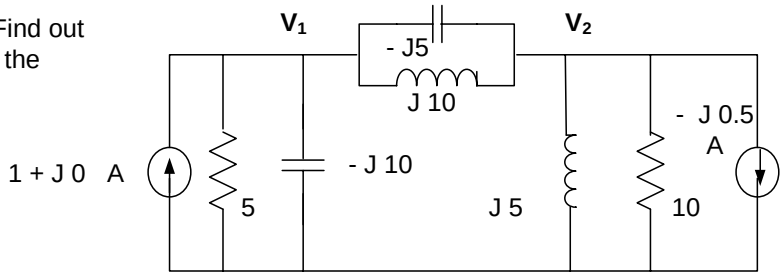

Ω